ITEM	QTY	DESCRIPTION	PART NUMBER
1	2	T-SLOT NUT, M8, IPS	U5000314P
2	1	PLATE, LUBE MOUNTING	U5009356M
3	2	JET, STUB	U5009359P
4	2	EXP" M5 METRIC FLAT WASHER (STN STL)	U6002506P_EXP
5	2	EXP" M5 STD SPRING LOCK WASHER (STN STL)	U6002562P_EXP
6	2	EXP" M8 STD SPRING LOCK WASHER (STN STL)	U6002564P_EXP
7	2	"EXP" HEX BOLT, M8X1.25 x 25 LG (STN STL)	U6002764P_EXP
8	2	"EXP" SOCKET HEAD CAP SCREW, M5X0.8 x 30.0 LG (STN STL)	U6003045P_EXP
9	2	EXP" HEX NUT, M5X0.8 (STN STL)	U6003615P_EXP

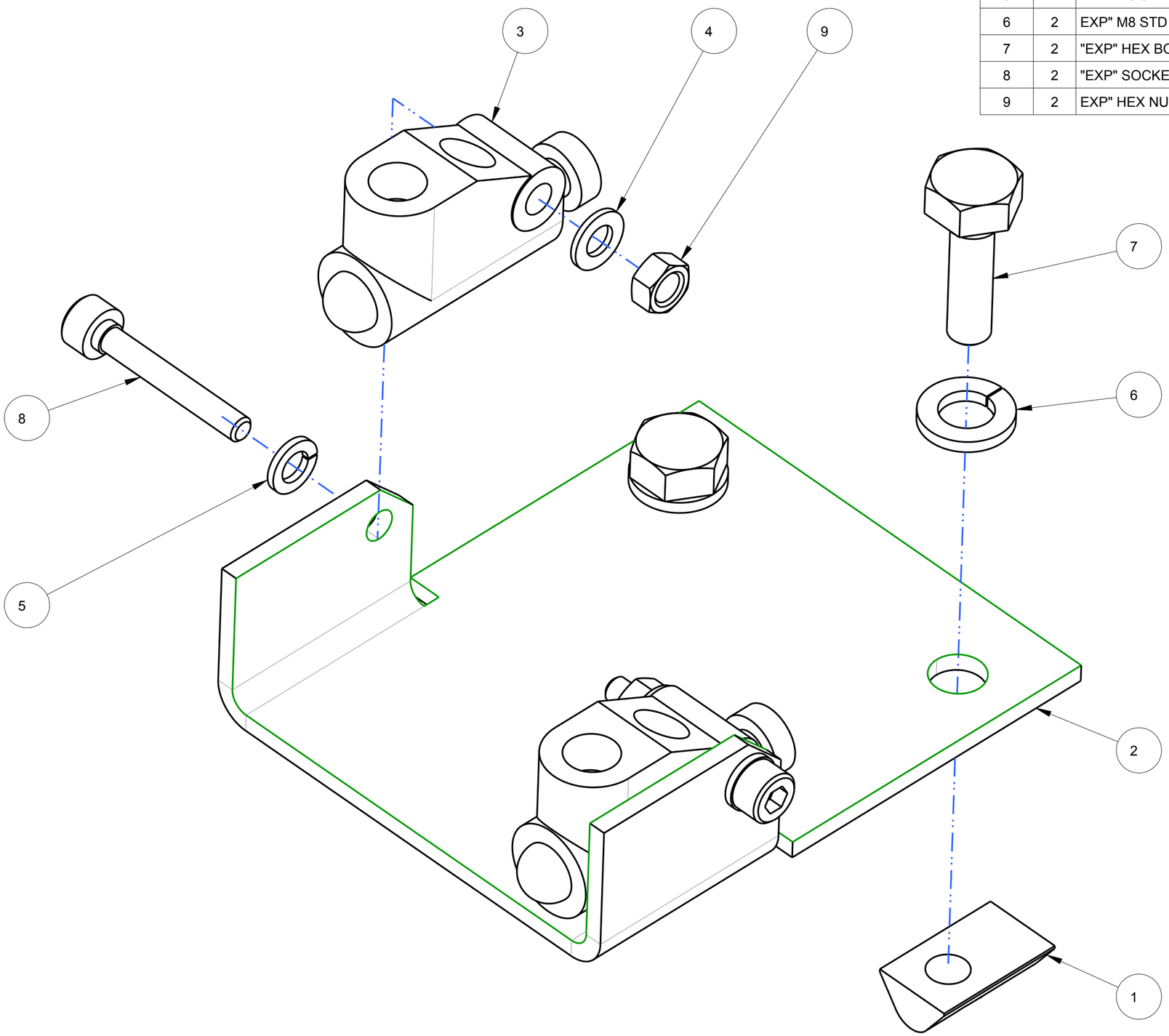

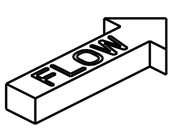

REV.	DESCRIPTION	BY / DATE	CHK'D / DATE
-	--		
-	--		
-	--		
-	--		
-	--		

NOTICE: THIS DRAWING AND ALL DATA, DESIGNS, STRUCTURES AND DESCRIPTIONS SHOWN THEREON ARE OUR PROPERTY. ALL PATENTABLE AND/OR COPYRIGHTABLE MATTER THEREON HAS BEEN PROTECTED BY APPLICATIONS FOR PATENT AND/OR COPYRIGHT. THIS DRAWING IS LOANED FOR A SPECIFIC PURPOSE AND MUST BE RETURNED ON DEMAND. AND MAY NOT BE COPIED, REPRODUCED, OR DUPLICATED IN WHOLE OR IN PART, WITHOUT OUR SPECIFIC AUTHORIZATION IN WRITING.

UNLESS OTHERWISE SPECIFIED: ALL DIMENSIONS MILLIMETER, DO NOT SCALE DRAWING

GENERAL TOLERANCE: HOLE, SLOT H12 OTHERS js12
CONCENTRICITY ±0.02 PERPENDICULARITY ±0.02/CM ANGULARITY ±0.25°
BREAK SHARP CORNERS REMOVE ALL BURRS FINISHED SURFACES 3.2 √(125)

METRIC

MATERIAL:

FINISH:

DRW BY: FDM	CHK'D :	ENGR. BY : MIDDLETON
DATE: 05-Jan-07	DATE :	DATE : 9JAN07

TITLE: ASSY, GROUPER LUBE

MeadWestvaco — Packaging Systems, Atlanta, Georgia, Deols, FRANCE

SCALE	MATERIAL CODE	DRW. SIZE	DRW. N°	REV	SHEETS
2/1		C	U5009355M	-	1/1